ELSEVIER

Journal of Biomechanics 40 (2007) 191–197

JOURNAL OF BIOMECHANICS

www.elsevier.com/locate/jbiomech
www.JBiomech.com

Dynamic dorsoventral stiffness assessment of the ovine lumbar spine

Tony S. Keller[a,*], Christopher J. Colloca[b]

[a]Department of Mechanical Engineering, University of Vermont, 119C Votey Building, Burlington, VT 05405-0156, USA
[b]Department of Kinesiology, Biomechanics Department, Arizona State University, Tempe, AZ, USA

Accepted 25 October 2005

Abstract

Posteroanterior spinal stiffness assessments are common in the evaluating patients with low back pain. The purpose of this study was to determine the effects of mechanical excitation frequency on dynamic lumbar spine stiffness. A computer-controlled voice coil actuator equipped with a load cell and LVDT was used to deliver an oscillatory dorsoventral (DV) mechanical force to the L3 spinous process of 15 adolescent Merino sheep. DV forces (48 N peak, ~10% body weight) were randomly applied at periodic excitation frequencies of 2.0, 6.0, 11.7 and a 0.5–19.7 Hz sweep. Force and displacement were recorded over a 13–22 s time interval. The in vivo DV stiffness of the ovine spine was frequency dependent and varied 3.7-fold over the 0.5–19.7 Hz mechanical excitation frequency range. Minimum and maximum DV stiffness (force/displacement) were 3.86 ± 0.38 and 14.1 ± 9.95 N/mm at 4.0 and 19.7 Hz, respectively. Stiffness values based on the swept-sine measurements were not significantly different from corresponding periodic oscillations (2.0 and 6.0 Hz). The mean coefficient of variation in the swept-sine DV dynamic stiffness assessment method was 15%, which was similar to the periodic oscillation method (10–16%). The results indicate that changes in mechanical excitation frequency and animal body mass modulate DV spinal stiffness.
© 2005 Elsevier Ltd. All rights reserved.

Keywords: Lumbar spine; Dynamic stiffness; Biomechanics; Sheep; Frequency

1. Introduction

Segmental instability and pathology of the spine are believed to produce abnormal patterns of motion and forces, which may play a significant role in the etiology of low back pain (LBP) (Nachemson, 1985). The ability to quantify in vivo spine segment motion (displacement) and stiffness (force/displacement) in response to forces is widely considered to be of clinical significance in the diagnosis and treatment of spinal disorders. Knowledge of spine segment motion patterns, forces and stiffness is also of fundamental interest in understanding the postural, time-dependent and dynamic response of the spine, the role of spinal implants in mechanical load sharing, and the response of the extremities (appendicular skeleton) and spine (axial skeleton) to externally posteroanterior (PA) applied forces such as spinal manipulation. Biomechanics researchers and therapists have therefore been seeking in vivo methods to assess the mechanical behavior of axial skeleton.

For spine testing, periodic excitation or oscillations with known frequency and magnitude is the most commonly used mechanical testing approach. Periodic excitation delivers large amounts of energy at each frequency, with a precisely controlled force. A number of studies have used low-frequency oscillatory or 'mobilization' devices to evaluate PA lumbar spinal stiffness in symptomatic and asymptomatic subjects (Kawchuk et al., 2001; Latimer et al., 1996a, b, 1998; Shirley et al., 2002; Kawchuk and Elliott, 1998). These studies indicate that the PA mechanical response of the lumbar spine is dependent upon many factors, including the intensity, direction, duration and frequency of the applied force. Of these factors, the frequency-dependent

*Corresponding author. Tel.: +1 802 656 1936; fax: +1 802 656 4441.
E-mail address: keller@cems.uvm.edu (T.S. Keller).

0021-9290/$ - see front matter © 2005 Elsevier Ltd. All rights reserved.
doi:10.1016/j.jbiomech.2005.10.037

stiffness of the lumbar spine is the least well understood, and few if any studies provide PA dynamic stiffness assessments of the lumbar spine over a broad frequency range.

The purpose of this study was to determine the dynamic stiffness characteristics of the ovine lumbar spine subjected to oscillatory dorsovental (DV) mechanical excitation. We hypothesized that the dynamic mechanical behavior (stiffness) of the sheep spine could be quantified using a relatively short duration swept-sine mechanical oscillation.

2. Methods

2.1. Mechanical testing apparatus

A custom, computer-controlled mechanical testing apparatus was used to generate mechanical excitation force–time profiles with varying force amplitude, duration and frequency (Fig. 1). The apparatus was comprised of a linear voice coil actuator (model LA25-42, BEI Technologies Inc., Ashford, Kent, UK) and a programmable, pulse-width-modulated servo amplifier, voice coil drive controller (model VCA100, BEI Kimko Magnetics, San Marcos, CA). The voice coil had a continuous stall force of 84 N and total stroke of 25.4 mm. A 665 N load cell (MLP-150, Transducer Techniques, Temecula, CA) and a ± 25 mm linear variable displacement transducer (model S1D, Instruments & Control Inc., Branford, CT) were used to measure the actuator force and displacement signals, respectively. Force and displacement signals were amplified using a dual-channel, digital-programmable gain amplifier (model PGA204, gain = 1000, Burr-Brown, Tucson, AZ).

2.2. Animal preparation

In all, 15 healthy, adolescent Merino sheep (mean 47.7 kg, standard deviation (SD) 4.9 kg) were examined using a protocol approved by an accredited animal ethics committee. Sheep were fasted for 24 h prior to surgery and anesthesia was induced with an intravenous injection of 1 g thiopentone. General anesthesia was maintained after endotracheal intubation by 2.5% halothane and monitored by pulse oximetry and end tidal CO_2 measurement. Animals were ventilated and the respiration rate was linked to the tidal volume keeping the monitored CO_2 between 40 and 60 mmHg.

The anesthetized sheep were place prone on an operating table, which included a rigid (wood) support beneath the abdomen (just caudal to the ribcage). The support was designed to orient the long axis of the sheep spine parallel to the operating table and perpendicular to the load actuator and secondarily to stabilize the trunk. The compliance of the load frame + actuator + table + wooden support was 0.0069 mm/N. Foam blocks were also placed on either side of the sheep abdomen to further stabilize the trunk along medial–lateral axis. An adhesive earthing pad was applied to the groin for electrocautery. With the animals in this standardized prone-lying position, a 1.5 cm region of the bony prominence of the L3 spinous process was exposed using electrocautery. A plain lateral X-ray film was taken to verify normal lumbar spine anatomy.

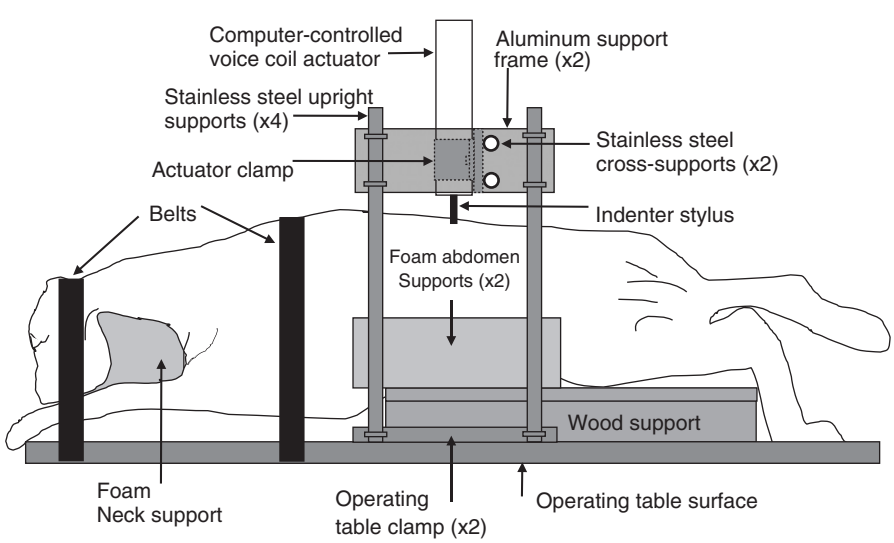

Fig. 1. Schematic diagram of the computer-controlled mechanical testing apparatus positioned over the ovine L3 spinous process of the prone-lying sheep. The apparatus consisted of an actuator assembly comprised of a voice coil actuator, linear variable differential transformer, load cell, and stainless steel indenter. The actuator assembly was attached to a stainless steel and aluminum load frame that was rigidly mounted to the operating table. Wood and foam supports were used to position and stabilize the sheep trunk and abdomen during the application of dorsoventral forces.

2.3. Mechanical excitation protocol

Using the dynamic mechanical testing apparatus, DV forces were applied directly to the exposed L3 spinous process via a 12.7 mm-diameter stainless-steel indenter rod equipped with a slotted tip that cradled the exposed spinous process. This minimized problems associated with the actuator sliding off the sheep spinous processes, which are more slender than their human counterpart. DV forces (−13 N preload to −48 N peak) were applied at periodic excitation frequencies of 2.0, 6.0, and 11.7 Hz. A broadband or harmonic frequency analysis was also performed using a swept-sine mechanical stimulation from 0.5 to 19.7 Hz (pseudo-chirp sweep). The order in which the periodic or harmonic frequency analyses were applied was randomized. Peak forces were approximately 10% of the mean animal body weight, consistent with the magnitude of DV forces used by clinicians in the treatment and assessment of lumbar spine disorders (Latimer et al., 1998). The applied force and DV displacement response were recorded at 2500 sample/s using a 16-channel, 16-bit data acquisition system (MP150, Biopac Systems Inc., Goleta, CA). Force and displacement signals were recorded during the periodic and chirp sweep oscillations for a total of 13 and 22 s, respectively (Fig. 2).

2.4. Data analysis

DV stiffness (peak–peak force/peak–peak displacement, N/mm) was determined from the force–time profiles of the periodic excitation protocols (mean stiffness over 20 intervals within the 13 s oscillation period), and at 44 discrete frequencies for the 22 s pseudo-chirp excitation protocol. For each interval, the loss angle (phase angle, degrees) between the peak force and peak displacement was determined using the relationship $360\Delta t/T$, where Δt (s) is the phase difference, and T (s) the period. Agreement between the fixed-frequency oscillation stiffness measurements (mean stiffness values) and the swept-sine stiffness measurements (at frequencies that corresponded most closely to the fixed-frequency values) was assessed by linearity tests (Passing & Bablok method comparison test for linearity and bias). Descriptive statistics (mean, SD), including the percent coefficient of variation (100 × standard deviation/mean), were also computed.

3. Results

For the swept-sine mechanical excitation protocol, the DV stiffness (mean ± standard deviation) of the ovine spine ranged from 3.86 ± 0.38 (4.0 Hz) to 14.1 ± 9.95 N/mm (19.7 Hz) over the 0.5–19.7 Hz frequency range examined (Fig. 3). At the minimum stiffness value (4.0 Hz), the force and displacement were out of phase by 58.4° (SD 10.6). The maximum phase angle change was 85.6° (SD 6.2) at 6.28 Hz.

There was very little variation in the DV stiffness over the time-course of the periodic mechanical excitation tests (mean coefficient of variation = 4.4% at 2.0 and 6.0 Hz, and 7.3% at 11.7 Hz). The DV stiffness determined using the periodic mechanical excitation protocol (2.0, 6.0, 11.7 Hz) agreed closely with results obtained using the swept-sine protocol (Table 1). There

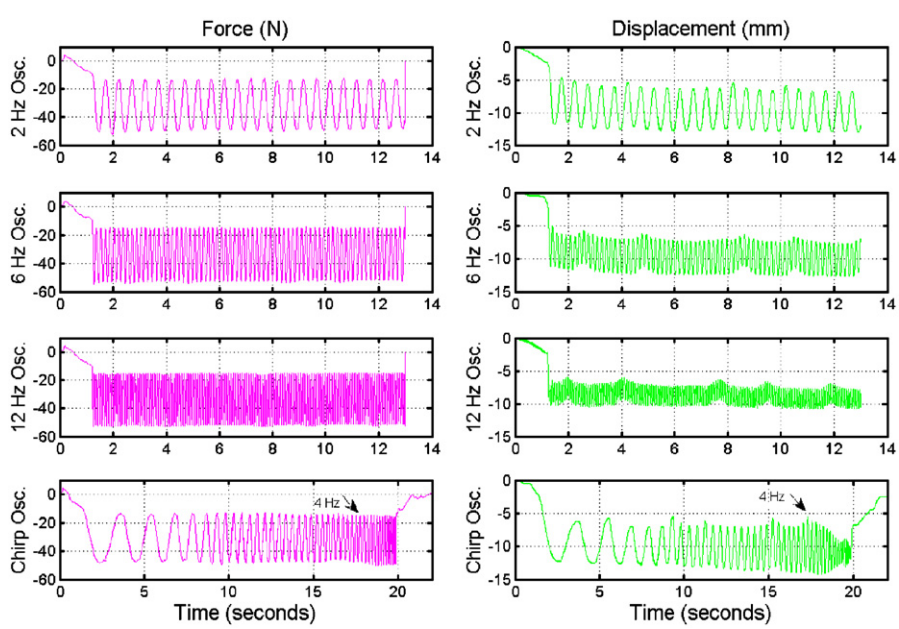

Fig. 2. Typical oscillatory response (dorsoventral force and displacement) of the ovine lumbar spine obtained for the periodic (2.0, 6.0, 11.7 Hz) and swept-sine (chirp) mechanical stimulation protocols. Undulations every 3–4 s in the displacement responses correspond to animal respiration.

was no significant difference in the DV stiffness determined using the periodic-sine protocol (2.0, 6.0 Hz) in comparison to the swept-sine protocol (2.0, 6.1 Hz) by linearity tests ($P > 0.1$). The linearity analysis showed no significant bias in the measurements. No direct method comparison was possible between the swept-sine and periodic-sine stiffness measurements at 11.7 Hz. For the swept-sine protocol stiffness measurement, the coefficient of variation ranged from 9.0% (4.25 Hz) to 71% (19.7 Hz). The overall coefficient of variation obtained for the swept-sine oscillation stiffness testing protocol was 15.4%. Periodic protocols showed a similar coefficient of variation (10.2%, 16.3%, 14.3% at 2, 6 and 11.7 Hz, respectively).

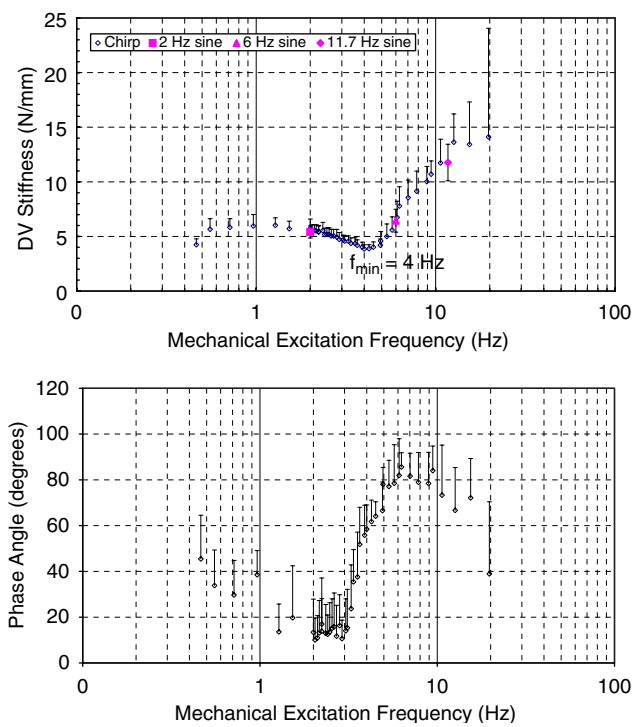

Fig. 3. Dynamic stiffness response of the ovine spine (top graph). Open symbols and closed symbols (mean, standard deviation) correspond to the swept-sine and periodic-sine protocols, respectively. The frequency corresponding to the minimum dorsoventral stiffness of the ovine spine was 4.0 Hz (f_{min}). Bottom graph shows the phase angle (mean, standard deviation) between the peak force and peak displacement.

The animals were similar in body mass (range 42–61 kg), but we did observe that there was a weak positive, linear correlation between DV stiffness and body mass for the 6 Hz ($R^2 = 0.35$, $P = 0.02$) and 11.7 Hz ($R^2 = 0.33$, $P = 0.03$) fixed-frequency tests. No significant correlation was seen for the 2 Hz data ($R^2 = 0.00009$, $P = 0.97$).

4. Discussion

The dynamic frequency-dependent stiffness behavior of the animal and human spine is modulated by intrinsic viscoelasticity of component tissues (ligaments, cartilage, bone, tendons, muscle) and load sharing provided by adjacent structures (e.g. ribcage, sternum, pelvis). When such factors are combined with other features such as spinal curvature, the net effect is a complex structure-frequency-dependent mechanical behavior.

In this study, the harmonic analysis performed showed that the in vivo PA stiffness of the ovine lumbar spine was frequency dependent and varied 3.7-fold over the 0.5–19.7 Hz mechanical excitation frequency range examined. During DV mechanical stimulation, the prone posture ovine lumbar spine was most mobile (least stiff) at 4.0 Hz. As there was a substantial force–displacement phase angle change at this frequency, 4 Hz most likely represents the natural frequency of the ovine lumbar spine subjected to DV forces. This frequency is similar to the in vivo natural frequency of the human lumbar spine (4–5 Hz) subjected to axial forces using impact testing in seated postures (Pope et al., 1987, 1991), but is substantially lower than the in vivo natural frequency of the prone-lying porcine lumbar spine (25 Hz) subjected to axial (craniocaudal) forces using harmonic analysis (Kaigle et al., 1998). The DV natural frequency of the anesthetized, prone-lying ovine lumbar spine is also substantially lower than the PA natural frequency (~40 Hz) reported for the human spine using modal analysis testing and modeling (Keller et al., 2000). Variations in the frequency-dependent stiffness response of the human and animal spine reflect differences in loading mode and spine, pelvis and trunk stiffness, as well as body mass, the latter evident from

Table 1
Dynamic stiffness* for the periodic and swept-sine mechanical excitation protocols

Periodic frequency (Hz)	Periodic stiffness (N/mm)	Swept-sine frequency (Hz)	Swept-sine stiffness (N/mm)	*P* value
2.0	5.41 (0.55)	2.0	5.74 (0.86)	>0.1
6.0	6.45 (1.05)	6.1	6.75 (1.48)	>0.1
11.7	11.8 (1.68)	10.6	11.7 (2.17)	
		12.6	13.6 (2.59)	

*Means (standard deviation), and *P*-values for periodic versus swept-sine group comparison tested with Passing & Bablok agreement test.

the body mass effects on periodic-sine dorsoventral stiffness tests observed in this study.

The in vivo DV stiffness of the ovine spine obtained in this study (4.3 N/mm at 0.5 Hz) is about 3–5-fold lower in comparison to the in vivo PA stiffness of the L3 spine (~15–20 N/mm) obtained for prone-lying human subjects using a low-frequency ($\leqslant$0.5 Hz) mobilization apparatus equipped with an indenter (Lee and Svensson, 1993; Lee and Liversidge, 1994; Squires et al., 2001), The PA stiffness response of the prone-lying human subject has undergone a substantial amount of investigation, but results are generally limited to static tests (Kawchuk et al., 2001; Kawchuk and Elliott, 1998), low-frequency oscillatory testing (Latimer et al., 1998, 1996b, c; Kawchuk et al., 2001; Kawchuk and Elliott, 1998), or impact (modal) testing (Keller et al., 2000; Nathan and Keller, 1994). Quasi-static loading conditions will tend to underestimate stiffness due to the viscoelastic creep-deformation of the structure. Evidence of such behavior has been observed in studies reporting the PA motion response of the lumbar spine during low-frequency (<0.5 Hz) oscillations (Lee and Svensson, 1993; Lee and Liversidge, 1994; Squires et al., 2001). In these studies, quasi-static or slow cycling ($\leqslant$0.1 Hz) PA mobilization is associated with an approximately 15–25% reduction in stiffness in comparison to mobilization at 0.5–1.0 Hz. In the current study, the decreasing stiffness (up to 28%) observed for mechanical stimulation below 1 Hz is most likely due to creep-deformation.

The human lumbar spine exhibits non-linear, load-deformation behavior. Inherent non-linearities in the load-deformation characteristics of the spine result in variations in the measured displacement and stiffness that are dependent on the magnitude of the applied force. For example, previous human PA mobilization studies using servo-controlled indenter apparatuses have reported a substantial increase in PA stiffness when the peak applied force is increased (Lee et al., 1997; Latimer et al., 1998). Similar results have been reported for the porcine spine subjected to increasing dynamic axial load (Kaigle et al., 1998). The influence of load magnitude on DV stiffness was not examined in the current study, but mechanical excitation tests with variable amplitude and uniform pulse duration (100 ms) indicate that the DV displacement response is linear between 20 and 80 N (Colloca et al., 2005). In addition, unlike previous clinical studies, we did not apply loads directly to the skin overlying the spinous processes. However, the presence of skin tissue would not be expected to have an appreciable effect on the stiffness measurements, since application of a preload causes the more compliant skin to compress. Nevertheless, effects of skin tissue compliance on dynamic mechanical response deserve further attention.

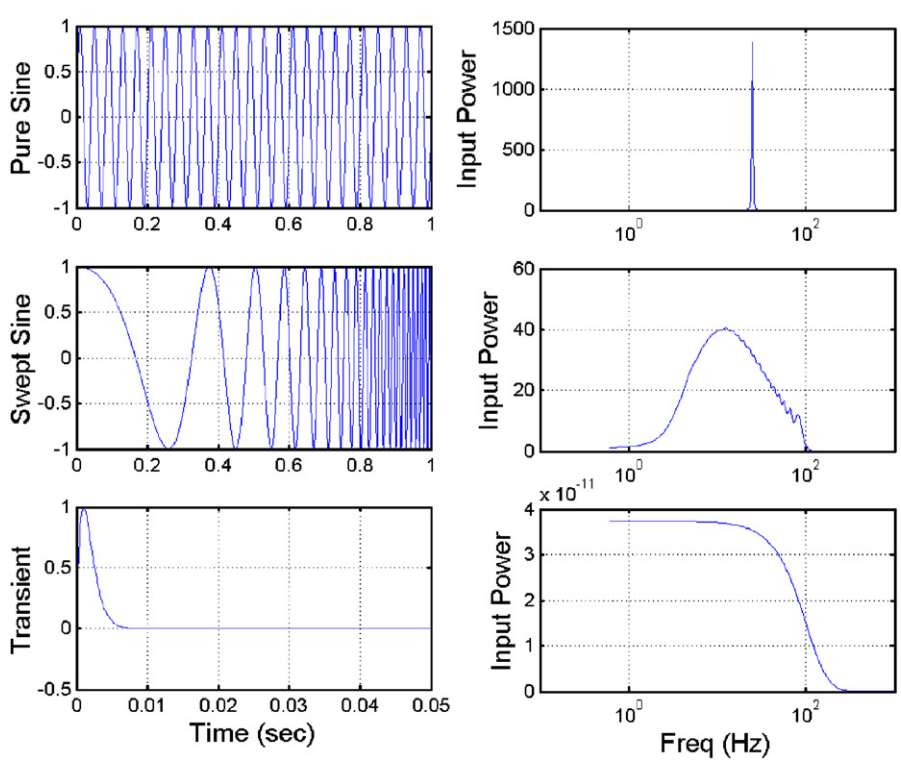

Fig. 4. Time domain and frequency domain (Power spectral density) of unit amplitude pure sinusoidal (25 Hz, top), chirp (0–100 Hz, middle), and transient (exponentially damped sinusoid, 0.05 ms duration, bottom) mechanical excitation signals. Compared to the periodic-sine (pure sine) mechanical stimulation approach, the swept-sine and transient mechanical stimulation approaches impart substantially less energy (input power) to the structure.

Another important consideration for in vivo spine stiffness assessments is respiration, which has been shown to modulate the mechanical response of the animal spine during static load tests in animals (Keller et al., 1990). In a recent study (Shirley et al., 2003), respiratory efforts were found to modulate the oscillatory (1 Hz) PA lumbar spine stiffness of human subjects. These authors reported that the qgreatest changes in stiffness (67% increase) were seen for measurements obtained during maximum expiration in comparison to measurements obtained with the lung volume held at functional residual capacity. In the current study, respiration effects were evident in the displacement response to controlled DV forces (refer to Fig. 2), but the ventilator-controlled respiratory cycle had only a minor effect on the stiffness measurements during the 13 s time-course of the fixed-frequency tests ($<7.3\%$). This variation is very small compared with the variation in stiffness observed over the 0.5–19.7 Hz frequency range examined (e.g. 3.7 fold), and indicates that respirator artifacts are minimal in ventilator-controlled experiments such as that performed in this study.

One disadvantage of the swept-sine testing approach is that a lengthy data acquisition is required. In this study, a 22 s acquisition resulted in 44 discrete dynamic stiffness values, albeit with most of the data concentrated below 10 Hz. Alternatively, a very fast and efficient method to determine the broadband dynamic PA mechanical response of the spine is to use a transient technique such as impact testing (Nathan and Keller, 1994; Keller et al., 2000, 2002 Colloca and Keller, 2001). Transient testing methods are several orders of magnitude faster than swept-sine test, but since the total energy provided by an impulse (typically a haversine) is distributed over a very broad frequency range, the actual excitation energy density is very small for any given frequency (Fig. 4). This presents a problem when testing large, heavily damped structures such as the spine because the transfer function will suffer due to the poor signal-to-noise ratio of the measurement, and typically necessitates ensemble averaging of multiple haversine impulses, but the sensitivity of the method is still poor (Nathan and Keller, 1994; Keller et al., 2000).

In conclusion, force-controlled, swept-sine oscillations were found to accurately represent the dynamic stiffness response of the ovine spine. Using an indenter applied over the spinous processes of prone-lying human subjects, dynamic stiffness assessment should assist clinicians in diagnosis and treatment of spinal disorders.

Acknowledgments

The research was supported by Chiropractic Biophysics Non-profit Inc. Technical assistance provided by Jodie Dier, Mike Fortney, Deed Harrison, Rob Moore, and Floyd Vilmont are also greatly appreciated.

References

Colloca, C.J., Keller, T.S., 2001. Stiffness and neuromuscular reflex response of the human spine to posteroanterior manipulative thrusts in patients with low back pain. Journal of Manipulative and Physiological Therapeutics 24, 489–500.

Colloca, C.J., Keller, T.S., Harrison, D.E., Moore, R.J., Gunzburg, R., Harrison, D.D., 2005. Spinal manipulation force and duration affect vertebral movement and neuromuscular responses. Clinical Biomechanics, in press.

Kaigle, A., Ekstrom, L., Holm, S., Rostedt, M., Hansson, T., 1998. In vivo dynamic stiffness of the porcine lumbar spine exposed to cyclic loading: influence of load and degeneration. Journal of Spinal Disorders 11, 65–70.

Kawchuk, G.N., Elliott, P.D., 1998. Validation of displacement measurements obtained from ultrasonic images during indentation testing. Ultrasound in Medicine and Biology 24, 105–111.

Kawchuk, G.N., Kaigle, A.M., Holm, S.H., Rod, F.O., Ekstrom, L., Hansson, T., 2001. The diagnostic performance of vertebral displacement measurements derived from ultrasonic indentation in an in vivo model of degenerative disc disease. Spine 26, 1348–1355.

Keller, T.S., Holm, S.H., Hansson, T.H., Spengler, D.M., 1990. 1990 Volvo Award in experimental studies. The dependence of intervertebral disc mechanical properties on physiologic conditions. Spine 15, 751–761.

Keller, T.S., Colloca, C.J., Fuhr, A.W., 2000. In vivo transient vibration assessment of the normal human thoracolumbar spine. Journal of Manipulative and Physiological Therapeutics 23, 521–530.

Keller, T.S., Colloca, C.J., Beliveau, J.G., 2002. Force-deformation response of the lumbar spine: a sagittal plane model of posteroanterior manipulation and mobilization. Clinical Biomechanics 17, 185–196.

Latimer, J., Goodsel, M.M., Lee, M., Maher, C.G., Wilkinson, B.N., Moran, C.C., 1996a. Evaluation of a new device for measuring responses to posteroanterior forces in a patient population, part 1: reliability testing. Physical Therapy 76, 158–165.

Latimer, J., Lee, M., Adams, R., Moran, C.M., 1996b. An investigation of the relationship between low back pain and lumbar posteroanterior stiffness. Journal of Manipulative and Physiological Therapeutics 19, 587–591.

Latimer, J., Lee, M., Goodsell, M., Maher, C., Wilkinson, B., Adams, R., 1996c. Instrumented measurement of spinal stiffness. Manual Therapy 1, 204–209.

Latimer, J., Lee, M., Adams, R.D., 1998. The effects of high and low loading forces on measured values of lumbar stiffness. Journal of Manipulative and Physiological Therapeutics 21, 157–163.

Lee, M., Liversidge, K., 1994. Posteroanterior stiffness at three locations in the lumbar spine. Journal of Manipulative and Physiological Therapeutics 17, 511–516.

Lee, M., Svensson, N.L., 1993. Effect of loading frequency on response of the spine to lumbar posteroanterior forces. Journal of Manipulative and Physiological Therapeutics 16, 439–446.

Lee, M., Latimer, J., Maher, C., 1997. Normal response to large posteroanterior lumbar loads—a case study approach. Journal of Manipulative and Physiological Therapeutics 20, 369–371.

Nachemson, A., 1985. Lumbar spine instability. A critical update and symposium summary. Spine 10, 290–291.

Nathan, M., Keller, T.S., 1994. Measurement and analysis of the in vivo posteroanterior impulse response of the human

thoracolumbar spine: a feasibility study. Journal of Manipulative and Physiological Therapeutics 17, 431–441.

Pope, M.H., Wilder, D.G., Jorneus, L., Broman, H., Svensson, M., Andersson, G., 1987. The response of the seated human to sinusoidal vibration and impact. Journal of Biomechical Engineering 109, 279–284.

Pope, M.H., Kaigle, A.M., Magnusson, M., Broman, H., Hansson, T., 1991. Intervertebral motion during vibration. Proceedings of the Institution of Engineers [H] 205, 39–44.

Shirley, D., Ellis, E., Lee, M., 2002. The response of posteroanterior lumbar stiffness to repeated loading. Manual Therapy 7, 19–25.

Shirley, D., Hodges, P.W., Eriksson, A.E., Gandevia, S.C., 2003. Spinal stiffness changes throughout the respiratory cycle. Journal of Applied Physiology 95, 1467–1475.

Squires, M.C., Latimer, J., Adams, R.D., Maher, C.G., 2001. Indenter head area and testing frequency effects on posteroanterior lumbar stiffness and subjects' rated comfort. Manual Therapy 6, 40–47.